M. Balcom

Inter-Society Color Council *Newsletter*

NUMBER 208
September-October 1970

ISCC WILLIAMSBURG SYMPOSIUM ON OPTIMUM REPRODUCTION OF COLOR

What can Eastman Kodak do to movie films that will make sure we get better color movies? Can RCA or NBC do anything which will give us better color TV? Are Ansco color prints "truer" in color than Kodacolor? What characteristics of National Geographic makes us say that their color pictures are better than most other magazines?

We have always been concerned with these questions, trying to improve materials, processes and equipment. But in the 1970's these questions are beginning to take on a new significance, particularly in television and printing. It is now possible through electronics and improved colorants to obtain almost any color result we wish, and we don't know exactly what to ask for.

Several researchers have begun to ask this question and to devise experiments which will answer it. Some of them have been asked to participate in a symposium on this subject. The symposium will be held in Williamsburg, Virginia, January 31, February 1, 2, and 3. The topic is Optimum Reproduction of Color. Speakers have been invited to discuss photography, movies, printing and television. Major contributors in the field have accepted our invitation:

Objectives in Color Reproduction: R. W. G. Hunt, Kodak Research, Harrow, England

Contributed Paper: F. Clapper, Kodak Research, Rochester

Photographic Prints: C. J. Bartleson, Kollmorgan Research

Accuracy in Color Photography and Color Television: R. M. Evans, Retired

The Measurement of Color Rendition in Color Television: R. Brodeur and K. R. Field, CBC Television

Review of Color Television, Daan Zwick, Kodak Research, Rochester

Color Television: Leroy DeMarsh, Kodak Research, Rochester

Recent Research in Color Printing: J. A. C. Yule, R.I.T., Graphic Arts

Review of Printing: W. L. Rhodes, Xerox Research, M. Pearson, R.I.T., Graphic Arts

Contributed Paper: M. Austin, International Publishing Corporation, England

Sessions will be held morning and evening leaving the afternoon open for discussion. Attendance is limited to 100. Invitations have been mailed to the ISCC membership and to some ISCC member bodies. Thirty-eight applications for participation have been received.

The importance of the subject, the quality of the speakers and the charm of Williamsburg all contribute to making this another of our famous Williamsburg symposia.

1971 ISCC ANNUAL MEETING

Color Images is the theme of the 1971 Annual Meeting. Realism in painting; quality in TV, movies, photography and printing all will be discussed. The Tuesday afternoon session will review the ISCC Williamsburg symposium on Optimum Reproduction of Color. The banquet speaker will reveal techniques used by artists which may teach something to TV electronikers and to graphic artists.

Problems committees will meet as usual on Monday. President Randall Hanes will conduct business meeting Tuesday morning. Your committee is working on several exciting events which, if they develop, will make an interesting and entertaining 39th Annual Meeting.

Location: The Statler Hilton, New York City

Date: April 18-21, 1971

FALL BOARD MEETING

The ISCC Board of Directors met in New York City on September 28, 1970. Present were: R. M. Hanes, President; R. S. Hunter, Vice-President; F. W. Billmeyer, Jr., Secretary; W. B. Reese, Treasurer; G. B. Gardner and R. Spilman, Directors; C. J. Bartleson, AIC Liaison; R. W. Burnham, Chairman of the Publications Committee; R. E. Derby, Jr., Chairman of the Problems Committee; W. N. Hale, IMG Liaison; W. J. Kiernan, President's Advisory Committee; and R. Phipps, assistant to the Treasurer. S. L. Davidson, Director, was not able to attend because of illness, and R. L. Feller, Director, was absent because of a conflicting meeting.

The Board noted with regret the passing in July of G. L. "Tiny" Erikson, past President and faithful member of the Council for many years. Tiny's many contributions to the Council were recalled in fond reminiscence. The Secretary was asked to transmit the sympathy of the Board to Mrs. Erikson.

After approval of minutes and 46 applications for individual membership, the Board turned to fiscal matters. Mr. Reese reported that the Internal Revenue Service had confirmed the non-profit status of the Council, which is classified by the IRS as a trade association. The rest of Mr. Reese's report was made with reference to several budget schedules that showed, among other things, a serious increase in the anticipated deficit for 1970 and more than 100 members delinquent in paying annual dues. The anticipated deficit increase, due to unexpected increases in costs, had prompted the Finance Committee to make a number of recommendations that met with Board approval. Unanimously adopted was the following resolution:

Resolved, that the Inter-Society Color Council Board of Directors adopt the fiscal policy requiring that operating expense budgets remain in balance.

With respect to unpaid dues, it was decided that a second dues notice should be sent and a report should be made at the next Board meeting.

The next major item of business was the Publications Committee report by Dr. Burnham. The Newsletter budget was discussed and suggestions were made with respect to reduction in number of pages and/or issues per year, mailing charges for inserts, and charges for use of the mailing list. The Publications Committee will meet to discuss these matters and others and issue policy recommendations to be presented to the Board.

Mr. Spilman reported progress in developing the symbol for the Macbeth Award and provided for Board comment a very handsome model, produced by Professor Robert Redman and some of his students at the University of Bridgeport School of Design. With the enthusiastic approval of the Board, Mr. Spilman and Professor Redman will proceed now to refine the current model and, possibly, have alternate models and price information ready for the next Board meeting.

Dr. Derby reported plans for meetings on the following day of the Subcommittees for Problems 7, 25, and 30. He later submitted a recommendation for "streamlining" the procedure involved in obtaining voting delegates' approval of subcommittee reports. His proposed procedure was approved by the Board and will be tested with the interim report on Problem 24, Catalog of Color Measuring Instruments. Approval was also given to the appointment of John T. Smith of the American Society of Photogrammetry, as chairman of the subcommittee for the recently approved Problem 31, Standard Methods of Measuring and Specifying the Color of Exposed and Processed Color Transparencies.

Mr. Hunter, in his capacity as Officer for Member-Body Liaison, reported the completion of a questionnaire form to be sent to delegation chairmen as soon as an up-to-date list of chairmen is available.

The Godlove Award Committee for 1971 was appointed and instructed to send out calls for nominations as soon as possible. George Gardner is the Committee chairman; members are R. E. Derby, Jr., W. J. Kiernan, E. I. Stearns, and Midge Wilson.

Plans for the 1971 Annual Meeting and the Williamsburg Conference on Optimum Color Reproduction were discussed briefly. Details of these meetings will be reported elsewhere in the Newsletter.

Two new Standing Committees were approved in principle: a Committee on Arrangements and a Committee on Individual Members. Midge Wilson and W. N. Hale, respectively, agreed to chair these committees once formal approval is given to acceptable statements of scope.

Additional items of business involved AIC liaison, policy on "corporate identity," the proposed Information Bureau, and joint sessions with Member-Bodies, all to be considered further at the next Board meeting, which is to be held in Williamsburg on January 31.

"TINY" ERIKSON

I have just learned with deep regret that "Tiny" Erikson had a heart attack on July 25 and passed away the same day. I have sent a brief note on behalf of the Council to Mrs. G. L. Erikson, 3636 Travers Rd., Shaker Heights, Ohio 44122; those of you who knew "Tiny" better and longer than I will no doubt wish to respond. We shall all miss his guidance and hearty friendship.

Fred W. Billmeyer, Jr.

THE PRODUCTS OF A PSYCHEDELIC AGE

New Instruments, Tied in with Computers, Revolutionize the Old Art of Color Matching

The "psychedelic era" has brightened the world with sights ranging from apricot business shirts to the Electric Circus. But a public switched on to color is playing hob with manufacturers: Shoppers are now demanding precise color matching in everything from textiles to paints. And their demands are far outstripping the capabilities of the craftsmen who traditionally have matched colors by eye alone.

Thousands of companies are trying to cope with these problems. About 40 or 50 of them make a variety of instruments that can be used for some kinds of color measurement.

As yet, however, only a handful of manufacturers make equipment specifically designed to measure color. This tiny industry is dominated by three companies: Kollmorgen Corp., Gardner Laboratory, Inc., and Hunter Associates Laboratory, Inc. But other companies are beginning to move into the field. Roland Derby, color consultant and president of Derby Co., considers color control "something of a gold mine."

Eye Defects

The crucial problem of color control in industry is that the eye and the brain are the things that people see by -- and people often disagree on what they see. Moreover, the eye cannot be sure that a color match made in daylight will hold good under artificial light. Nor can it distinguish the reflected wavelengths of light that give an object color.

The instrument makers do not expect to replace the human eye entirely. Says Kollmorgen Vice-President Warren B. Reese: "You can't replace human judgment. But you sure can augment it." To this end, the industry is trying to provide objective figures to describe and to speed up color formulation (the selection and proportioning of dyes), color matching, and color control.

As a starter, the industry is concentrating on mating color-measuring instruments and computers. Seven years ago, American Cyanamid Co. launched a computer service developed by Eugene Allen, now a professor at Lehigh University. This service, for dyestuff customers, works out dye combinations ranked by cost and by their ability to give color matches under all forms of lighting. General Electric Co. also offers this program as a time-shared computer service.

Today, the big push is for faster and cheaper color-processing instruments. This year, Kollmorgen marketed a system called KCS-40 for color measurement and matching but not, as yet, for color formulation. Costing $41,750, it is a blend of mini-computer (Digital Equipment Corp.'s PDP-8L) and a Kollmorgen spectrophotometer (an instrument used to read wavelength characteristics of color samples).

In May, a license to make and sell the 36-year-old mainstay of color-matching technology, the GE Recording Spectrophotometer, was acquired by a new company, Diano Corp., formed this year by a group of former Kollmorgen employees. The $23,000 instrument has been mated with a PDP-8L mini-computer for a color-matching and formulation system costing up to $60,000.

Direct instrument-computer hookup eliminates the delay and risk of error involved in transferring data by hand, and may lead to dramatic changes in industrial color handling. "Two men with proper equipment could conceivably do the job of 10 men working only with their eyes," says Ruth M. Johnston, Kollmorgen's director of application services. Computers can also slash the time spent on training colorists, as well as keep records automatically for each dyeing.

Future

A major hurdle for industry is the jump from simply checking color matches to a fully-automated system for controlling color in production. But closed-loop color control is now appearing in the paper industry. Consolidated Papers, Inc., has fitted Hunterlab instruments to four papermaking machines and hooked them to an IBM 1800 computer to cut losses from unwanted color changes detected only slowly by conventional sample checking.

Gardner Lab Vice-President Matthew A. Cattaro says his company also plans to adapt a new colorimeter to paper color control. And Neotec Corp., an aerospace company, a year ago formed Neotec Instruments, Inc., to sell instruments for color matching and control. Says Neotec Instruments President David H. Selman: "We expect the market to reach $50-million a year in the reasonably near future -- and we expect to get 25% of it."

COOPER-HEWITT MUSEUM OF DECORATIVE ARTS AND DESIGN

Smithsonian Institution

The fourth floor of the Cooper Union is no longer a museum. We have moved to the Carnegie property on 90th Street and Fifth Avenue.

While the Carnegie Mansion is being renovated, the staff is occupying the adjoining townhouse at 9 East 90th Street. Most objects in the display collections are on loan to other museums and will be returned to be shown in a new setting upon completion of the renovation. The study collections, however, are with us and are available by appointment.

A campaign has been launched to raise the funds for the renovation of the Mansion. Some major gifts are under way and the campaign is off to a good start.

We shall keep you informed of progress from time to time and seek your participation and involvement in this exciting challenge of creating a "national museum of design." Meanwhile, we are eager to show you our new home and hope you will visit the Mansion at 2 East 91st Street.

Lisa Taylor, Director

THE THEOLOGY OF COLOR MEASUREMENT

Book I

Geniuses

In the beginning there was darkness and void.
And God said Let there be light; and there was light.
And God saw the light that it was good: and God divided the light from the darkness.
And God called the light and the darkness Value.
And on the sixth day God created Adams.
And these are the generations of Adams.
Adams begat Munsell, and Munsell begat Mac Adams,
And Mac Adams begat Simon and Goodwin:
Now Munsell also begat three sons called Hue, Value and Chroma
And each of these sons begat ten sons and each of these ten more sons:
And the sons were so like each to the next that no man could but scarce distinguish between them.

Book II

Numbers

Now there came about in the land of Kohlor a great contest of seers and savants and those skilled in the mystery of numbers.
And this was the manner of their trial: to place about a point the smallest ring that could be seen.
And the ring required to be true and even with no part one whit closer nor one whit further from the middle than its fellows.
And there came to the fray Munsell from the land of Ba'astun,
And DIN from across the sea, and Judd, and Mac Adam, and Hunter, and
Moon, and Spencer, and Billmeyer, and Glasser, and other mighty men of old.
And each came with great arrays of numbers
And they called upon strange powers and with cabalistic signs concocted great stews of root of square and root of cube.
But lo! Though they strove with might and main, not one could form a true ring.
But each that they made was awry and bent askew, some in one way and some in yet another.
Thus all their struggle came to naught.

Book III

Ezekiel or Perhaps Not Ekiel

Now also in the land of Kohlor in the provinces of Delta there came about a controversy among the prophets as to how the Trinity might be One.
Some there were who said that Ehcks and Waiee and the Shade of Value could by the squinting of the eye be seen as One.
And yet others spake saying Nay! The One can be found only in the fusion of Ahee and Bhee and Ehll.
There were also radicals among them who spake of the Power and the Sum and the Holy Spectral Figure.
Each proclaimed that his was the one true Instrument through which the
Oneness of the Three might be seen.
And they disputed for days without end and could not agree one with another.
Oh Man! If you will have harmony between thy house and another's, both must pledge their faith to but one Instrument and forget not the uses of Judgement.

W. J. McConeghey

PROFESSOR ARTHUR C. HARDY JOINS DIANO CORPORATION

Professor Arthur C. Hardy, an internationally recognized expert in optics and the inventor of the well known HARDY RECORDING SPECTROPHOTOMETER, has recently joined DIANO Corporation's Scientific and Business Advisory Board. In 1961 Professor Hardy retired from the faculty of MIT after nearly forty years of service. Since retiring from teaching, his consulting activities have continued -- in part with the Guidance and Navigation aspects of NASA's Apollo program.

DIANO Corporation recently acquired from the General Electric Company the manufacturing rights to the HARDY RECORDING SPECTROPHOTOMETER. General Electric Company has produced the instrument for many years and it has achieved a world-wide reputation as the "referee" instrument for measuring color. DIANO management has stated that Professor

Hardy will play an active role in its program of developing new and improved instrumentation for the measurement of color and other optical properties.

Professor Hardy's contributions to the field of color technology have been many. The Color Measurement Laboratory which he established at MIT in 1933 was a unique facility for many years. With the aid of the staff of that laboratory, the HANDBOOK OF COLORIMETRY was published in 1936. In that field of color reproduction, he is probably best known for his rigorous analysis of additive color processes such as are used in color television.

LIGHT, COLOR AND ENVIRONMENT

By Faber Birren. Published by Van Nostrand Reinhold Company, New York, 1969. 131 pp. $19.95.

In the opening paragraph of his chapter on Biological Lighting, Faber Birren writes of himself: "In his professional activities, this writer has endeavored to be student, scholar, and practitioner of color relationships all in one. . . . He has worked with color and people for several decades, doing his best to adapt the pure, scientific inquiries of others to everyday problems and conditions." Anyone who has read a reasonable sample of the many books that have flowed from his facile pen will recognize the accuracy of this self-appraisal. Faber Birren is indeed a scholar, delving into the physiology and psychology of light and color, seizing upon the latest scientific information on reactions of plants, animals and man to radiant energy. His success as a consultant stems from his ability to interpret this literature and apply it to satisfy human needs.

In his books Faber Birren has tried to share his insight with others. Light, Color and Environment is by no means the first such attempt, nor is it likely to be the last; but it is the latest and best. The four opening chapters (The Primary Significance of Light, Biological Effects of Color, Vision -- A Dynamic Process, Psychological Reactions) are brilliant and succinct summaries of what must be voluminous notes derived from extensive reading. The style is inspirational; the scope of subjects, amazing; yet scientific accuracy is surprisingly well maintained. Some questionable sources are cited; some generalizations are too unguarded; but the practical message comes through loud and clear.

Electromagnetic energy affects man in many ways. It supplies him with induction heating for cooking, it carries his messages by radio and television, and it relieves aches and pains through deep heating by diathermy. Infrared energy serves him for heating and drying. In the form of laser beams radiant energy cuts holes in diamonds, re-attaches detached retinas, and by holography produces three-dimensional photographs. Visible energy gives man the gift of sight, and the same rays that appear to him red and blue also are strongly absorbed by chlorophyll and so provide man with food and fiber from green plants. Ultraviolet energy produces vitamin D in human skin, kills germs, and sterilizes water and air. X-rays and gamma rays serve to diagnose and treat disease. Electromagnetic energy governs the lives and sexual cycles of animals and perhaps of man. But excessive sunlight can cause malignant tumors; and excess infrared, cataracts. These reactions to, and uses of, electromagnetic energy must be taken into account in the design of the environment. Birren does not presume to say what amounts of what spectral regions will have to be provided for the work and living spaces, perhaps subterranean and submarine, of the future; but he does say that if high input of radiant energy is required it will not be for seeing but for biological effect.

The chapter on Biological Lighting stresses man's need for electromagnetic energy, particularly ultraviolet, to maintain health; that on Good Vision Lighting quotes the practices recommended by the Illuminating Engineering Society, admits that high levels make seeing easier, quicker, and more efficient, but states that levels higher than 150 footcandles are not really necessary and may induce eyestrain from glare.

In his chapter on Lighting for Appearance, Birren gives several very pertinent examples of how important it is for the lighting system to make people look healthy. He says, ". . . women employed to work in an industrial area illuminated by clear mercury reported severe 'eyestrain' and distress. While light level was perfectly ample, the complaint was easily traced to the fact that the complexions of the women turned greenish and their lips black -- and this was hardly tolerable in a situation where men were also present." Some of the favorable possibilities in color rendition of the human complexion are illustrated by showing in the first of 16 color plates photographs of the same girl under 9 different kinds of lighting-background combinations.

The chapter on Psychic Lighting makes as much sense as can be made out of flashes and swirling shapes of glittering color combined with blaring and raucous noises to produce a psychedelic experience that lifts people out of themselves without resorting to LSD.

Chapters 9 through 17 are for this reviewer the meat of the book. Practical advice on lighting and choice of colors is given for offices, industrial plants, hospitals, motels and hotels, shops and stores, food service, and apartments and homes. The principal advice given is that these choices should be made on the basis of scientifically established facts and principles, not on the whims or personal preferences of the designer.

1. "It is normal -- and best -- for the tint of a light source to be warm in quality at low levels of intensity

and cool in quality at high levels." This is called Kruithof's principle after the Dutch (not German) scientist.

2. "Be aware of the fact that color values will appear in their true identity only at reasonable and high levels of light intensity, not at low levels."

3. Colors of high lightness and warm hue promote outward orientation; use them to favor performance of muscular tasks.

4. Colors of medium lightness and cool hue direct attention inward; use them to favor performance of intellectual tasks.

5. High color contrasts distract attention away from intellectual tasks; keep such color combinations out of the office, but use them in the supermarket.

6. Moderate color contrasts can prevent monotony as by an end wall exhibiting such a contrast from the other walls.

7. Very light colors around windows serve to minimize high brightness contrasts with the sky, and so reduce eyestrain.

8. The primary hues (red, green, blue, and sometimes yellow) are better liked than secondaries (particularly, yellow-orange, yellow-green, and purple).

These principles (only the first two are cited as such) are exemplified, elaborated, and hammered home by showing how they apply and what they mean in the design of enclosures for various purposes, -- work, play, eating, purchasing. The recommendations flowing from application of these principles are made precise by reference to two color charts. One shows 36 con-

---

THE COLOUR GROUP (GREAT BRITAIN)

MEETINGS 1970-71

*7 October	2:00 pm	Seminar on Colour Education and Training	Various Speakers
*11 November	3:00 pm	The Optical Variables in White Paint Films Uniform Radial Tolerance Method of Colour Difference Assessment	D. F. Tunstall J. S. Mudd
**2 December	3:00 pm	Understanding Colour Reproduction	Dr. R. W. G. Hunt Other speakers
**6 January	3:00 pm	Colour Matches which include Equality of Scotopic Luminance Some Aspects of Defective Colour Vision	Dr. D. A. Palmer Dr. K. H. Ruddock
**3 February	3:00 pm	Colour in Therapy	M. H. Wilson
**3 March	3:00 pm	Colour in Architecture Studies on Surface Texture by Goniospectrophotometry	D. L. Medd M. P. Wassall
*7 April	3:00 pm	Standard Conditions for the Assessment of Colour	C. R. Bullett J. E. Cotton I. Glasman D. G. C. Thornley
**5 May	3:00 pm 3:30 pm	Annual General Meeting Chairman's Address	 Dr. R. A. Weale
June		Summer Visit	To be arranged
*11 December Joint Meeting with London Section of S.D.C.	6:00 pm	Metamerism, Colour Constancy and Related Problems	R. Booth

All meetings will be held at Imperial College, London, S.W. 7 but in two different departments:
*Mechanical Engineering Dept., Exhibition Road. Theatre 664
**Physics Dept., Prince Consort Road, Theatre 3

temporary choices of color; the other, 36 traditional. They are further illustrated in 11 of the 16 color plates.

The book is also illustrated by 62 pictures in black-and-white. It has a bibliography of 90 titles, 43 referring to publications less than 10 years old, and is rounded out by the final two chapters (The Historical Background, The Colors of Period Styles) to which also the final two color plates are devoted.

Light, Color and Environment is to be recommended to interior designers for inspiration and guidance, and to the general public for a prophetic glimpse into the future of our homes, factories, offices, and stores, whether subterranean or not.

Deane B. Judd

THEORY OF COLOURS

Johann Wolfgang von Goethe (1810). Translated by Charles Lock Eastlake (1840). Introduction by Deane B. Judd (1970). Paperback edition by The MIT Press, Cambridge, 1970. Pp xvi + lxii + 423.

The original "Farbenlehre," as first published by Goethe in German in 1810, consisted of two volumes in 8vo, and sixteen plates with descriptions in 4to. The first volume was divided into two parts, one didactic or expository, and the second a polemic or controversial part. The second volume was historical. The 1840 translation by Eastlake (published in London by John Murray) was confined to the expository part, because he felt that Goethe's scientific critics had paid more attention to Goethe's theoretical arguments than to his detailed and meticulous reports of voluminous but careful observations. Goethe had been discredited by the scientific community for his vehement departure from fashionable physical theory. He had not enjoyed "the credit he deserved for the accuracy and the utility of his investigations." Eastlake's translation was an attempt to separate the wheat from the chaff and the task was admirably accomplished, in a highly readable and free-flowing translation.

Deane Judd's introduction to the new MIT printing is a splendid contribution in itself. It constitutes a most immaculate, thorough, and penetrating review of Eastlake's translation. I can only recommend that you read Judd's introduction to be immediately inspired to continue with the "beauty and sweep" of the translation by Eastlake. Among other penetrating thoughts, Judd said:

"The advantage of trying to follow Goethe's explanations of color phenomena is that, by the time you have succeeded in doing so, your thoughts have become so divorced from the wavelength explanation of color, that you can begin to think about color theory relatively unhampered by prejudice, either ancient or modern . . . Perhaps, after 160 years, Goethe's mystical theory may come to be recognized as foreshadowing, however dimly, the next important advance in the theory of color."

Judd pointed out about Goethe that "Instead of attacking the physicists of his own day, who deserved it, for their neglect of the subjective aspect of color, he attacked their predecessor, Newton, who did not." Newton in his "Opticks" had said about the rays of light that "Indeed, rays, properly expressed, are not coloured. There is nothing in them but a certain power or disposition which so conditions them that they produce in us the sensation of this or that colour."

Goethe's theoretical position was much nearer to the lightness-darkness notion of Aristotle than the newer Newtonian concept of wavelength composition as an explanation of color and, as Judd pointed out, "Goethe's explanation of color makes no physical sense at all."

Goethe did, however, describe the simple tools and conditions for perceiving a tremendous variety of color experiences. As Judd said, "Goethe had a passion for careful observation and accurate reporting that may come as a surprise from a theatrical director and famous author of fiction. Most of Goethe's explanations of color have been thoroughly demolished, but no criticism has been leveled at his reports of the facts to be observed; nor should any be."

Goethe's observations ranged from the facts of light and dark adaption, through contrast and the essence of the Helson adaptation-level theory, to other subjective phenomena such as after images, colored shadows, and pressure phosphenes. The reader is led also through "a demonstration course . . . in physical phenomena detectable qualitatively by observation of color (absorption, scattering, refraction, diffraction, polarization, and interference)."

Goethe's ideas on color harmony will appeal to artists and others not actively a part of the scientific community, though I confess I am not qualified to pass on them.

The Eastlake translation, published in 1840, contained illustrative color plates that appear to have been hand-tinted and they have faded with time. These plates have been reproduced in the MIT edition using modern techniques. Whereas the plates were interspersed in the Eastlake edition to appear at locations at which they were referenced, in the MIT edition they have been grouped in a single insert which is a moderate inconvenience. Some of the plates were enlarged to cover two pages instead of one.

The manuscript has to be perfect since it has obviously been photographed and reproduced, page by page, for

the MIT edition. The most significant addition has been the thoughtful introduction by Deane Judd.

Robert W. Burnham

Reprinted with permission from J. Opt Soc. Amer., 1970, 60, 988.

NEW SERIES OF TRAINING COURSES DEVOTED TO SOLUTION OF PRACTICAL INDUSTRIAL COLOR PROBLEMS

The Color Systems Division of Kollmorgen Corporation announces the presentation of a new series of training courses devoted to the solution of practical industrial color problems. The first course entitled "Color and the Behavior of Colorants" was given in October at the Macbeth Color and Photometry Group Research Laboratories in Newburgh, New York.

It will offer practical experience in the application of colorant formulation methods. Lectures will be presented by Kollmorgen staff members with many years of experience in the practice and teaching of the application of basic color theory to industrial color problems. Lecturers include Hugh Davidson, Henry Hemmendinger, Ruth Johnston and James Davidson. James Bartleson, Vice President for Research of the Macbeth Color and Photometry Group, will provide an added dimension to the course content with a lecture emphasizing the significance of visual perceptual aspects.

Laboratory sessions will be assisted by Miss Elaine Keller, in addition to the scheduled lecturers. Laboratory exercises will offer participants practical experience in the application of the methods presented. The number of attendees will be limited so that each participant can receive individual attention. The company's complete line of color measuring and computing equipment will be available.

The practical training courses offered by Kollmorgen's Color Systems Division are being organized by the newly formed Department of Application Services; Ruth Johnson, Director. They are designed to complement the university educational courses supported by Kollmorgen Corporation at Rensselaer Polytechnic Institute and at Clemson University previously announced by Warren B. Reese, Vice President of Kollmorgen.

The fee for the course is $250.00 which includes all supplies, textbook, reference material, lunches and an evening banquet.

Information on the courses and application blanks may be obtained by writing to Mrs. Sandra Kovacs, Kollmorgen Color Systems Division, 40 South Eighth Street, Tatamy, Pennsylvania 18085.

ASSOCIATION INTERNATIONALE DE LA COULEUR

Symposium on Color-Metrics

At AIC Stockholm '69 it was decided to have, in between the great quadrennial congresses, smaller symposia on selected topics.

In September 1971, just prior to the great CIE-congress in Barcelona, the first symposium of this sort will be held at Driebergen/Holland. The Dutch Color Association NVVK will be host.

Scope of the Symposium

Aim of this symposium is to gather a selective group of active workers in the field of color-metrics.

Main emphasis will be laid on evaluation of experimental data and on theoretical concepts on just noticeable and just acceptable color differences; on the problem of uniform color scaling; and on the conversion of these to useful results.

Included will be the problems of the choice of the receptor-primaries in the tectorial descriptions; and the choice of field size and luminance as describing parameters. It is intended to let the symposium gradually proceed from a more basic physiological point of view to the more practical points as the recommendations for uniform color scaling by the OSA- and CIE-committees. In this respect the symposium might also be considered as a pre-exercise for the CIE-meeting in Barcelona.

Housing

The symposium will be housed in a modern conference resort in nice wood-rich surroundings near the small village of Driebergen, in the middle of the country. Participation will be restricted to about 75. A limited number of rooms will be available for couples.

Costs will be moderate (estimated $100.00, including conference fee, housing and meals, and one copy of the proceedings).

Language and Proceedings

The symposium language will be English. In order to facilitate concise and fruitful discussions, preprints will be requested, which moreover may serve to enable rapid editing of proceedings. In the proceedings, it is planned that summaries will be given in English, French and German.

Social Activities

A special attraction of this symposium is that no social program is planned. Participants are supposed

to relax between sessions in the spacious park surroundings. It be noticed that rapid and frequent bus and train connections may carry accompanying better halves to nearby Utrecht and not far Amsterdam.

Participation

Individuals interested in this meeting are asked to contact the Secretariat as soon as possible. This involves no commitment, rather an expression of interest.

Organizing Committee:

P. L. Walraven, Soesterberg
L. F. C. Friele, Delft
J. L. Ouweltjes, Eindhoven
J. J. Vos, Soesterberg

Correspondence Address:

Dr. P. L. Walraven
Institute for Perception RVO
Kampweg 5, Soesterberg
Netherlands

NEW PROBLEM

A new problem subcommittee designated Problem 31 -- Standard Methods of Measuring and Specifying the Color of Exposed and Processed Color Transparencies -- has been approved by the Board of Directors.

According to preliminary discussions held in organizing the group, the solution to the problem would require:

1. Standardization of color measurement within the required tolerances.

2. Standardization of the luminance for viewing and measurement, and

3. Standard color designation, as for example, Hue, Value and Chroma in the Munsell system and the ISCC-NBS system for naming the color.

The chairman of the new subcommittee is John T. Smith from the American Society of Photogrammetry. Anyone interested in working with this group should contact the chairman whose address appears in the ISCC Roster.

DRY COLOR MANUFACTURERS' ASSOCIATION DELEGATION

The following members of DCMA have been appointed as representatives to the Inter-Society Color Council:

Delegation Chairman -- Max Saltzman, Allied Chemical Corp., Specialty Chemical Div., P.O. Box 1087R, Morristown, New Jersey 07960

Emil A. Wich, Sandoz, Inc., Pigments Dept., Hanover, New Jersey 07936

Samuel Zuckerman, H. Kohnstamm & Co., Inc., 161 Avenue of the Americas, New York, New York 10013

NATIONAL SOCIETY OF INTERIOR DESIGNERS DELEGATION

Executive Director: John Hammon, 315 East 62nd Street, New York, New York 10021

Chairman:	Donald Waterman, NSID(E)
Voting Delegates:	Torwald H. Torgersen, AIA, NSID Charles Freeman, NSID
Other Delegates:	Dede Draper, FNSID Edith Gecker, FNSID Ausby E. Lee, FNSID Frances Brener, FNSID Professor Arnold Friedmann, NSID(E) Marion Gardiner, NSID Agnes D. Gray, NSID

TRACING THE COLOR BOOM IN PRESS, AD, SUPPLY DATA

Here's an over-view of the color printing scene. Data presented is, necessarily, of the "indicative" rather than "definitive" type, since the latter is either nonexistent or (where derived from extensive private research) "classified."

Color is an emotional experience. People react and relate to color. They experience blue Mondays, red-letter days, turn black with rage, brown as a berry, white as a sheet, and purple with passion. But the best color of all, according to the National Assn. of Printing Ink Mfrs. (NAPIM), is green. For green means go and money.

According to all reports -- from the government Census Bureau, magazine and newspaper associations, individual printing ink manufacturers, and NAPIM -- the use of color inks has had the "go" sign for many years. Color inks have been, and are, on the upswing. And process color has made the most significant gains.

Color printing inks account for about 90% of the tons of ink manufactured -- if you exclude news inks -- reports Douglas Horner, NAPIM's executive director.

The most recent figures reported by the Department of Commerce show that in 1958 there were 725-million pounds of printing ink manufactured. Of this poundage, 46% or 332 million pounds, was news ink. However, news ink only represented 10% of the dollar volume. By 1975, the Department of Commerce predicts that it will only represent 6% of the dollar volume.

The government estimates that in 1970, 65% of the 1 billion 20 million pounds of ink manufactured will be used by the commercial, publication and package printing industries. The figure predicted for 1975 is even more optimistic. By 1975, says the U.S. Census, the printing ink industry will see sales well over $500 million. There will also be about 1-1/4-billion pounds of ink manufactured in 1975. Only 30% of these inks will be news inks. Most of the remaining 70% of ink will be color; much of it will be process color inks.

According to the Bureau of Advertising, American Newspaper Publishers Assn., ROP color accounted for some 153 million lines in 1959. In 1968, this figure jumped to 330 millions, an increase of 116%. This is an average increase of about 13% per year for the last nine years. And it should continue to rise.

Similarly, the use of Hi-Fi has risen from 10-million impressions in 1961. Then, on Oct. 8, 1961, the use of process color inks was given another shot in the arm with the introduction to the United States of Spectacolor. On that Sunday, the New York News (Sunday Edition) ran its first Spectacolor test, a full-page reproduction of Shirley MacLain. The test proved successful, and the News decided to conduct further tests. Between Jan., 1961, and Oct., 1962, the paper ran 36 additional tests. The results were equally as good.

By 1967, the use of Hi-Fi and Spectacolor in all newspapers accounted for 1.5-billion impressions. The figure for 1968 took a slight drop due to one major user buying more color TV time. However, this reduction of the use of process colors by Hi-Fi and Spectacolor has been offset by the increased use of preprinted newspaper sections. These sections use both ROP and process colors.

Magazines have also increased the use of ROP and process color. One researcher checked four issues of two general circulation magazines published in the 1920's and found that 45% of the one-page ads used color, whereas no half-page ads used color. Similar checks made in 1935, 1945, and 1955 showed substan-

Dollar Volume Trends of Offset Multi-color Work

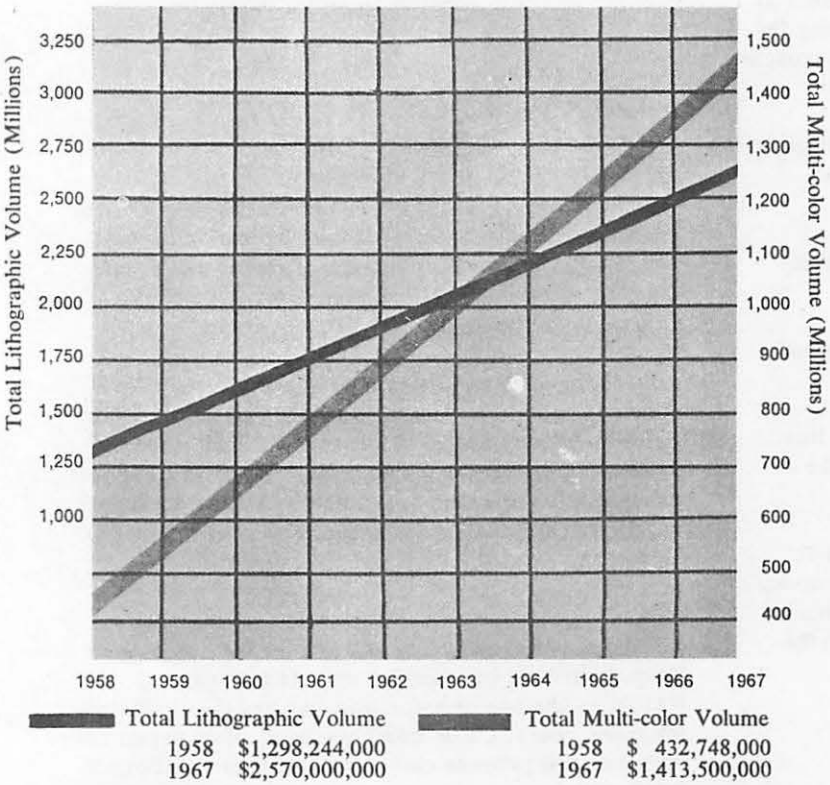

This chart reflects a 10-year record of the growing trend toward multi-color printing, according to data from Mergenthaler's Press div. Sales of multi-color products indicate a one-third market share in 1958. In 1967, this jumped to 55% of the total lithographic market. Between 1957-1962, the number of four-color (or more) presses in the field doubled. In the 10-year period, the number of such presses quadrupled.

Growth in Use of Three- and Four-color Pages and Preprints in 30 McGraw-Hill Publications, 1964-1968

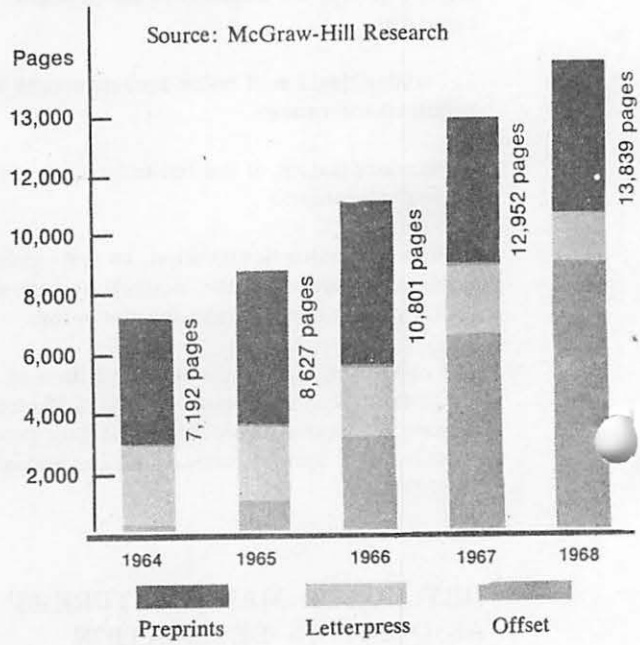

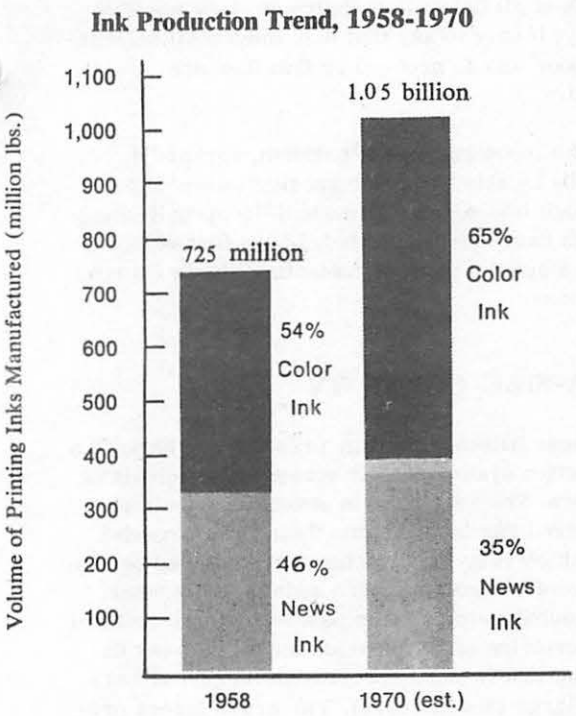

Source: Census-Dept. of Commerce

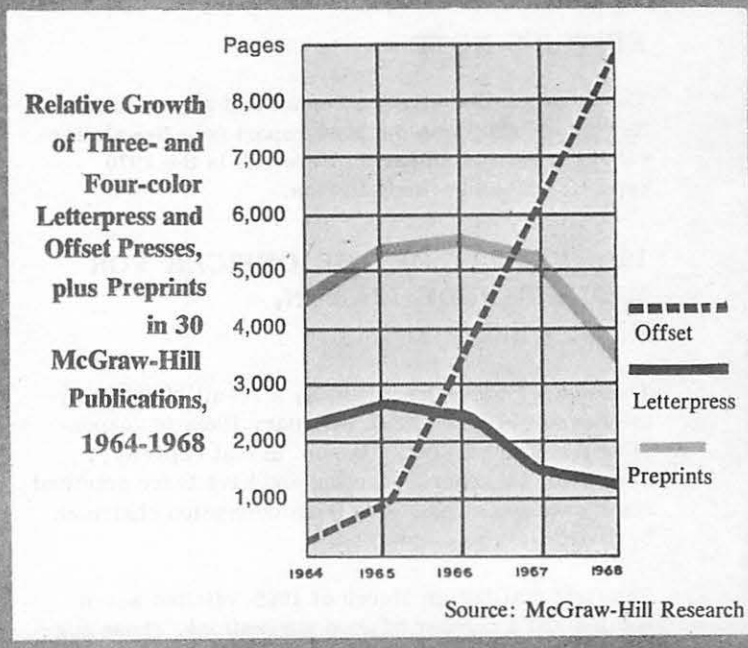

Source: McGraw-Hill Research

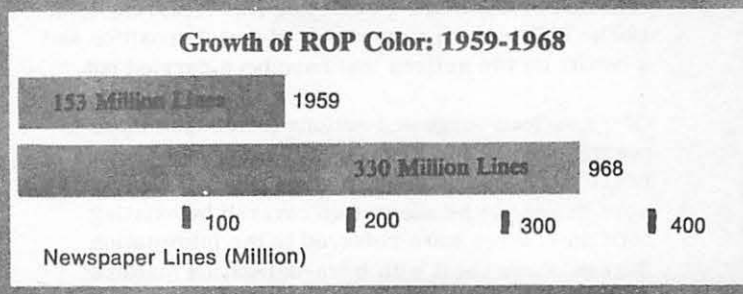

tial increases. By 1965, 67% of the full-page ads were in color and 43% of the half pages took the rainbow plunge.

The biggest increase of color in magazines came after World War II. One expert suggested that the reason for the increase was a "pent-up demand for things after the war." Color was among the "things" wanted. The Magazine Publishers Assn. reported that the use of four-color ads (probably process color) rose from 39.7% in 1966 to 43.3% in 1968. Total color usage (two- and four-color ads) rose from 47.7% in 1966 to 49.8% in 1968.

A recent check of 600 corporations contacted by the Professional Photographers of America revealed that annual reports of America's 500 largest corporations, 50 largest banks and 50 biggest insurance companies are using more color in their annual reports. According to the PPA, the jump in the use of full-color photography in only one year was nearly 210%.

One of the most important moves that NAPIM has made is to set a standard for process inks. Working with the American Assn. of Advertising Agencies, the Magazine Publishers Assn., Associated Business Publications, American Photoengravers Assn., and the Magazine Printers Section of the Printing Industries of America, under the sponsorship of the Graphic Arts Technical Foundation, the printing ink association helped to improve and further standardize the operations having to do with magazine letterpress four-color proofing.

It was the aim of the multi-industry committee to minimize variables wherever possible. The ultimate objectives were to use one standard kind of proofing paper, one standard proofing ink, one standard color bar, and standard proofing practices. Part of the objectives have been reached by having one official source for AAAA/MPA Standard Four-Color Process Proofing Inks. One ink manufacturer will supply, in unlabeled compartmentized cartons, four tubes of specified colors to all members of NAPIM. NAPIM members will, if they wish, apply their own labels to the tubes and cartons and sell the approved proofing inks to their customers.

Reprinted with permission from Printing Magazine, October, 1969.

EDITOR'S NOTE

The Member-Body liaison report that appeared in Newsletter #207 was the 1969 report (see Newsletter #199) reproduced in error. Herewith is the 1970 report on Member-Body liaison.

1970 REPORT OF THE OFFICER FOR MEMBER-BODY LIAISON, R. M. HANES

The current Vice-President, as a result of action by the Board of Directors in February 1969, is responsible for Member-Body liaison. In that capacity, I have held one general meeting and have twice solicited comments and suggestions from delegation chairmen by mail.

The first mailing, in March of 1969, elicited seven replies and a number of good suggestions. Those suggestions and the disposition thereof by the Board were reported in full in the Newsletter (#199, March-April 1969). Following is a summary of that disposition and a report on two actions that have been carried out.

Of the sixteen suggested actions (other than those posing technical problems), two were judged by the Board to be embraced in the ISCC By-Laws, three were thought to be adequately covered by existing activities, three were referred to the Information Bureau, three dealt with intra-delegation matters that were considered important and desirable but outside the Board's control, one had been accomplished, one was judged infeasible, and three were marked by specific suggestions involving foreseeable implementation. One of these last three will have been accomplished when Professor Helson presents his report to the ISCC on work sponsored by the IERI-IES. In addition, the infeasible action has been demonstrated to be feasible by having details of the 1970 Annual Meeting published before December 1, 1969.

With respect to the general meeting held at the time of the 1969 Annual Meeting, it can be reported reliably that it was an unqualified failure. Not even one delegation chairman put in an appearance to make a comment.

The second mailing was made in January of this year. It has elicited eight replies, five of which contained comments or suggestions. Of the latter five, one posed a problem, one implied that ISCC activities are satisfactory with respect to the Member-Body in question, one indicated a preference to reserve comment until the incoming board had been "seasoned" for a year, and two referred to last year's suggestions. Of last year's suggestions that were repeated specifically, one had to do with "official hosts" for the Annual Meetings and the other repeated the emphasis on joint symposiums between the ISCC and its Member-Bodies as the best way to promote understanding.

The above summary of activities and results can be said to indicate that initial formal steps to promote more active relationships between the ISCC and its Member-Bodies have met with very limited success. While some good suggestions have been received, the poor response (only about 25 percent) to the mailings is discouraging. Even though the approach of soliciting written comments by mail may not be the best one, it seems, nevertheless, that if there were active interest on the part of all delegation chairmen, they would at least reply, if only to say that they think mail solicitation is a poor way to proceed or that they are indisposed.

Perhaps the incoming Vice-President, Richard S. Hunter, will be able to arouse greater interest, possibly through tetè-à-tetè (or eyeball-to-eyeball) meetings, which have been suggested. I hope that delegates will make a special point of contacting him to express their opinions.

CINEMA-SIZE COLOR TV

The Japanese Hitachi Company presented at Expo 70 a new projection system for big screen color television using lasers. The system is in essence very simple. Three colored gas lasers shine their light through crystals which vary the brightness of the three beams; a sequence of dichroic mirrors adds them together and the resulting single beam passes to horizontal and vertical revolving mirrors which move it across the screen. The lasers were specially developed and are unusually large (8 watts each). Two argon lasers produce the green and blue beams, and a unique Krypton laser provides the red.

The brightness modulating crystals are of dipotassium phosphate and are operated by expensive 1000 volt video signal amplifiers. The horizontal scanning mirrors have 16 faces and revolve at 60,000 rpm; the vertical scanner has 24 faces and revolves at 150 rpm. Both have to be synchronised with the camera's electronic camera circuits. The development model of the machine is pretty cumbersome. In a few years time it may be possible to make a smaller model for home use, but at present the lasers have a very short life-span (a few hundred hours) and low voltage modulating crystals cannot be grown in large enough sizes.

RECOMMENDED COLOUR-DIFFERENCE FORMULA

For some time the Colour Measurement Committee has been studying all the available sets of data relating perceived colour differences as judged by industrial colourists to measured colour differences obtained by applying each of several colour-difference formulae to the tristimulus values of sample-standard pairs. The formulae studied have included the CIE Recommendation (CIE 64) and the three recommended

by the CIE in 1967 for further study, viz. Cube Root, Munsell Renotation and Friele-MacAdam Chickering 2.

No formula has been found to give consistently high correlation with visual data but the Adams-Nickerson formula, often known as the Adams Chromatic Value formula, is the one most frequently among the best in each set. As this formula is, in addition, the easiest one to use in the absence of a programmable calculator or computer, it is therefore recommended for general use in the textile industry.

The Committee, however, is continuing its search for a formula that is significantly better than the Adams-Nickerson formula and, if it is successful, this recommendation will be suitably amended.

K. McLaren
Chairman, Colour Measurement Committee

E. Coates
Honorary Secretary, Colour Measurement Committee

From Journal of the Society of Dyers and Colourists, August, 1970

THE ADAMS-NICKERSON COLOUR-DIFFERENCE FORMULA

K. McLaren presented a full account of the development of the Adams-Nickerson formula and a set of the tables that are required if a computer is not available.

This also appears in JSDC for August 1970, 354-356.

DANIEL COMSTOCK

Daniel Comstock, 86, MIT physicist who helped Engineer Herbert Kalmus develop the Technicolor process for making color movies, died in Concord, Mass. Though they began work in 1914, it took Comstock and Kalmus more than six years to develop their complex color process; even then, their first commercial film, a 1922 feature starring Anna May Wong, was at best blurry and unpromising. It was not until 1932, seven years after Comstock had left the partnership to develop a color process for still photography, that Technicolor came into its own as a commercial success.

Ralph Evans referred me to E. J. Wall's now rare but monumental book on "The History of Three Color Photography," (1925, American Photographic Publishing Co., Boston) and I have excerpted quotations concerning some of the specific contributions made by Daniel Comstock during his earlier years.

In a chapter on still cameras and chromoscopes it was stated that:

"D. F. Comstock patented a photometer in which the visual intensity of various parts of the subject can be compared with a standard light-source; filters, similar to those to be used during exposure, being interposed in the path of the image and the standard light. Tables must be drawn up from actual trials which shall give the correct exposures under the different filters with the different intensities of the light."

Then from a chapter on optical data I found a description of this complicated gadget:

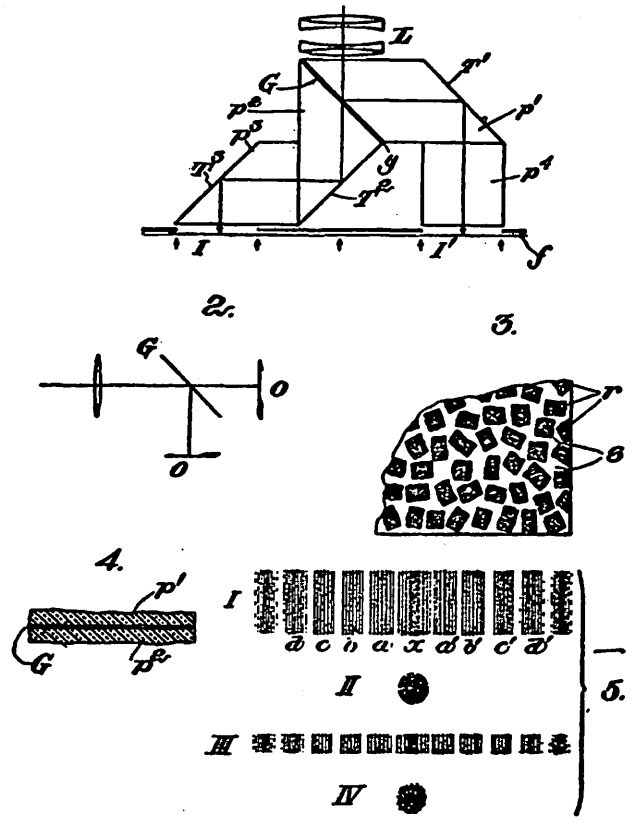

FIG. 85. Comstock's U.S.P. 1,231,710.

"D. F. Comstock patented a particular form of grid or reflecting surface, consisting of polygonal forms irregularly distributed, Fig. 85. In 1 is shown the lens with the compound prism block, composed of the prisms p^1, p^2, p^3 and the block p^4; f being the film and I, I' the gates; T^1, T^2, T^3 are the totally reflecting surfaces and the grid G is placed on the plane g. By this means the optical path of the two beams is equal. In 2 the device is shown for observing the superimposed images. The grid shapes are shown enlarged in 3, in which r represents the polygonal reflecting shapes, which might take other forms, and s the transmitting portions; 4 is merely a section through the grid. In 5 is shown the familiar result of a diffraction grating giving the central image and the spectra on each side, the appearance of the central white beam being shown in II, the object being a spot. If a slit be used then III is seen, and the inventor claimed that by this particular form and distribution of the grid

elements the appearance as in IV was obtained. Subsequently the composite prism block and lens were patented, the whole being termed the composite component and lens component of a lens system. Constructional details are given in the specification for both. Curvature of the last faces of the prisms was indicated to partially correct the aberrations, and a correcting positive lens element might be placed in front of the camera lens, which obviated the curving of the prism faces. In the additive projection of polychromatic pictures there is always great liability of non-registration of the individual color constituents due to machine defects, or more often to unequal expansion and contraction of the film base. To facilitate registration Comstock patented the idea of including a target in every picture."

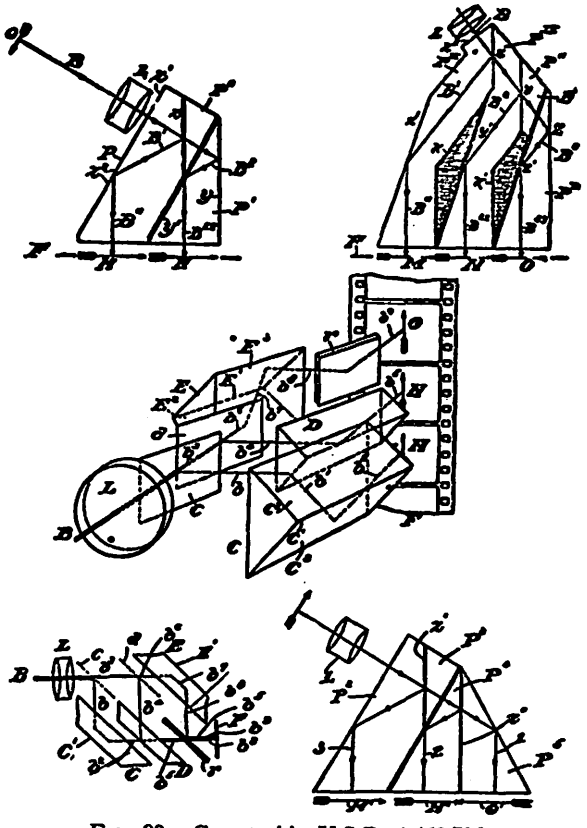

FIG. 99. Comstock's U.S.P. 1,460,706.

Then, in the same chapter, this brief reference was found.

"D. F. Comstock patented various prismatic systems, Fig. 99, for obtaining two or three complemental images. In conjunction with J. A. Ball the obtaining of head to foot images by means of prisms, Fig. 100, was claimed."

From a chapter on opaque and glass supports, we quote:

"D. F. Comstock and Technicolor Motion Picture Corporation patented a film of double-width, which was folded down its length, then perforated, printed through the support and treated so as to obtain reliefs, which were suitably dyed, then the two celluloid faces were cemented together."

With regard to subtractive processes, the following quotation is presented.

"A. Coppier would produce films in colors by making enlargements, coloring the same and then assembling and copying. M. Holfert patented the use of films which were each coated with the same positive emulsion. D. F. Comstock patented the control of the gammas, or degree of contrasts, of the positives, by alteration of the color of the printing light."

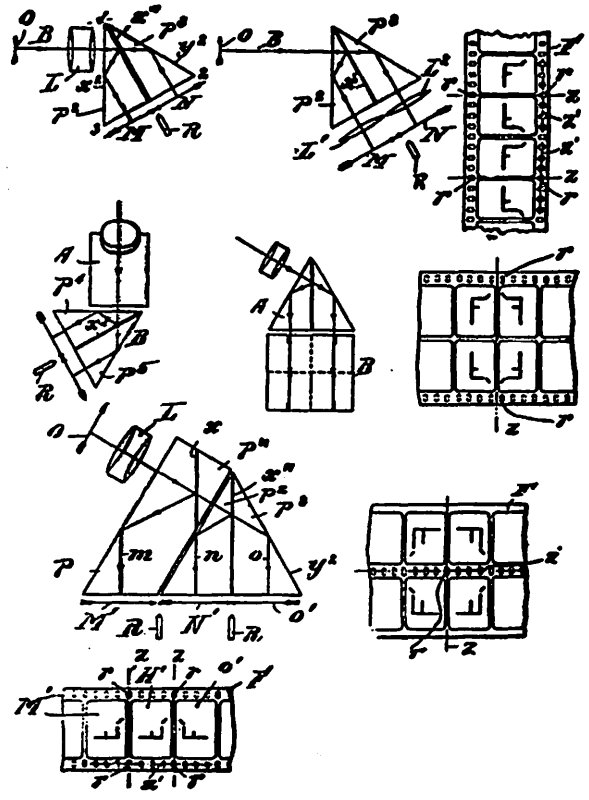

FIG. 100. Comstock & Ball's U.S.P. 1,451,325.

In a review of "double-coated stocks" we found this statement:

"C. Paraloni and G. P. Perron patented a projection printer in which the images were reproduced in smaller dimensions on one side of the middle line of the film, the other color records being then similarly printed on the other side of the middle line. D. F. Comstock patented a printer in which the images were obtained in register by optical printing."

Then from the same chapter, the following:

"D. F. Comstock patented a blower to remove super-

ficial moisture from the surface of a film and a suction pad to withdraw any liquid in the perforations."

I regret that I have not been able to find anyone who could give me more personal information about Comstock. The above excerpts will, however, give some idea of the kinds of contributions he made.

R. W. B.

COLOR-PREFERENCE EXPERT, IERI RESEARCHER, HONORED

Prof. Harry Helson of the Psychology Department of University of Massachusetts, Amherst, Mass., was among the major contributors to a three-day symposium on the Adaptation-Level Theory presented recently as a tribute to him by the university. Dr. Helson is a long-time Illuminating Engineering Research Institute researcher on color preference. His report, analyzing 156,000 reactions to color combinations amassed in his IERI project, was published in the October "Applied Optics."

Dr. Deane B. Judd, Assistant Chief of the Optics and Metrology Division of the National Bureau of Standards and a member of the IERI Research Executive Committee, was chairman of the symposium which was arranged by Dr. H. M. Appley, Dean of the University of Massachusetts and chairman of the Psychology Department, and Prof. William Bevan of Johns Hopkins University, Baltimore, Md., with the assistance of grants from the Biopsychology Program of the National Science Foundation, the University of Massachusetts Graduate School, and the National Institute of Mental Health.

Dr. Helson spoke on "The Adaptation-Level Theory: 1970 and Beyond" at the opening session, setting the theme of the symposium.

Dr. Bevan also delivered a paper, "A-L Theory and the Organization of Perceptual Space."

Serving as chairmen at several sessions examining adaptation to various elements of the environment were Dr. Lloyd L. Avant of Iowa State University; Dr. John A. Hebert of Colorado State University; Prof. Francis W. Irwin of the University of Pennsylvania; Prof. Ross Stagner of Wayne State University; Prof. David C. McClelland of Harvard University, and Dean Appley.

The proceedings will be published next year by Academic Press under the title "Adaptation-Level Theory: An Evaluation: with a "festschrift" dedication to Dr. Helson.

From IERI Newsletter, July 27, 1970

CONTEXT IN INDUSTRIAL DESIGN

"Context -- an audio-visual excursion into the unique nature of industrial design and the forces and circumstances that bear upon it" was the thrust of the 1970 Annual Meeting of the Industrial Designers Society of America in October.

A media-oriented probe into the character of one of the most complex and indefinable of the professions was made in largely non-verbal terms, using multiple screen projection, movies and coordinated sound. Open-end discussion followed each of the presentations, and was structured to maximize expression, individually or en masse, to the stimuli offered.

The presentations reflected:

Case Studies and Current Design Practice -- photo essays of the methods and philosophies being used by current practicing designers. Range was from technical product development to philosophical and human context of the creative process.

How Design Students See Themselves and Their Work -- one way of previewing the future of design is to see what the students of today are concerned about. Perhaps more important is seeing whether skill and excellence of performance can match the quality of student concerns.

How Design Teachers See Their Students and Their Work -- what are the methods and attitudes of the design pedagogy both toward themselves and their goals, and how they evaluate and comprehend their students' efforts.

Design by Non-Designers -- a pictorial review of the far-out world of non-planned aesthetic experiences to be had from micro-miniature circuits, airplanes, specialized scientific photography, or advanced structural concepts -- just to name a few examples. The possibilities are vast, but the focus was on industrially related techniques and disciplines.

Design in Nature -- most forms, indeed perhaps all, have a precedent in nature. Through new and expanded photo techniques, many of the systems of structural conditions in nature were seen more lucidly than before. Many direct parallels were drawn between man's technology and natural forms and events.

Product Evolution -- a pictorial stroll down industrial memory lane with stops at birth, childhood, adolescence, and (with luck) maturity. Selected examples were vehicles for a visual dissection of the family tree behind present day products.

Foreign Design -- a review of trends, products, and design attitudes to the world's creative hot spots. Both students and professional designers were included.

Relationship of Industrial Design to Other Design Oriented Practices -- a visual survey of the leading edge in various form-making pursuits. Examples from far-out fashion design through graphics, advertising, interior design, landscape architecture, architecture, etc. to experimental urban planning, with stops in between, created the influential context in which industrial designers perform -- or participate.

THE UNSEEN WORLD

The human eye, in all its magnificance, sees and translates for us the world we live in. The beauty of nature, the magnificance of man's towers and the wonderful varieties of life. But what the eye can't see is also a big part of our world. In fact, objects smaller than a fiftieth of an inch in diameter, invisible to the human eye, make up the largest part of our world.

With the help of microscopes, these minute objects can now be seen. But micro organisms and molecular structures aren't the only part of the unseen world that is beyond the comprehension of the human eye. Infrared waves and micro waves, radio waves, x-ray waves and gamma-ray waves have been for years invisible forces. Today some of these forces are not only used in photography, but they can be photographed as well. We can see far out into the universe with our telescopes, and inside the human body with fiber optic motion pictures.

Then too, we do not see the thousands of ultraquick or extremely slow motions that are only casually noticed with little detail by the human eye. We don't see the splash of spilled milk float up into a crown, or the glittering parabolas of shattering glass broken by a screaming bullet, because these are visual occurrences that can't be studied carefully without the help of special cameras taking thousands of still pictures per second. And time-lapse photography captures, in seconds, the slow development of a living green wiggle into a leafy, flowering plant.

These sights, and more, that we just don't have the time or opportunity to look for, are now captured in a special one-hour program presented last September by 3M Company. Jules Power, the award-winning producer of such television innovations as "How Life Begins," the "Discovery" series and "Sense of Wonder," produced this interesting and informative special hour. Isaac Asimov, the famous science writer and novelist, has written a stimulating and exciting script.

Together, these two greats in the area of television production and scientific writing bring you the story of a world immensely and enormously greater than that which the human eye can perceive. They bring to you the fascinating and provocative story of THE UNSEEN WORLD.

RICHARD L. PIPE JOINS DIANO CORPORATION

C. Harris, President of DIANO Corporation, recently announced the appointment of Richard (Dick) L. Pipe as Field Service Engineer. Dick comes to DIANO with many valuable years of experience in servicing of electro-optical instrumentation used in the field of color measurement.

Dick joins Charley Brederson, who is Manager of Field Service, and these two offer a combined experience totaling more than twenty-five years in the industry. This staff addition gives DIANO a competency which is second to none and allows DIANO to offer all of their customers prompt and efficient service on their color measurement instrumentation.

In addition to servicing the DIANO products, both Dick and Charley are available to provide Preventative Maintenance and Emergency Repair Service on the Kollmorgen IDL Color-Eye®, Color-Rad®, Colorede®, CADC, CODIC, COMIC I, and Bausch & Lomb 505 Spectrophotometer. This addition to our staff represents one more improvement to make DIANO the leading customer oriented organization in the industry.

FURTHER REFINEMENTS IN APOLLO'S COLOR TV

Along with the Goerz-designed stereometric camera, future Apollo missions will also be carrying a new and much improved television camera that weighs only 10 pounds and can transmit pictures under all extremes of lighting on the moon, including the intense brilliance of a lunar high noon.

Two models of the camera, which was designed by RCA under a $196,500 NASA contract, are being delivered to the Manned Spacecraft Center in Houston this summer. The company describes the camera as being immune to damage from sunlight, even when pointed directly at the sun, and capable of operating effectively "across a light range much broader than possible with previous space color TV systems." It is also described as more compact and more rugged than its predecessors. It could be used to beam "live" pictures to home TV from the Command and Lunar Modules as well as from the lunar surface.

The camera will transmit at the commercial rate of 30 frames-per-second, 525 lines-per-frame. However, it will utilize the technique whereby a series of one-color images -- red, blue, green -- are created by a revolving color wheel and transmitted in sequence.

From Optical Spectra, July/August, 1970

A TRIP TO THE LIGHT FANTASTIC

Laser Light -- A film produced by Scientific American, Motion Picture Department, 415 Madison Avenue, New York, N.Y. 10017. Print Purchase: $375.00. Print Rental: $37.50 (for three days' use).

Reviewed by Cecil G. Shugart, Director, Society of Physics Students, SUNY at Stony Brook, N.Y. 11790

Laser Light, truly the "light fantastic," is a beautiful blend of light and sound. Artistically pleasant in shape, form, sound, and color, the film distinctly serves its educational purposes by generating enthusiasm for laser phenomena while transmitting the appropriate information. No doubt the interplay of light and sound will be considered overdone by some observers, but the excitement that is created by having sounds coordinated with a variety of laser demonstrations will be particularly effective for acquainting the nonspecialist with laser principles.

Technically and aesthetically the film is very well done. Bright sound accompanies bright light, lower notes emphasize lesser light. Dissonance of light brings dissonance of tone, while examples of monochromatic light blend with pure tones to obtain the overall effect. Camera techniques are particularly impressive, as would be expected from a film that was judged one of the best educational short subjects at the 1969 Chicago International Film Festival, received an award at the 1969 Columbus Film Festival, and was considered worthy of Honorable Mention in the Film-as-Communication category at the 1969 San Francisco International Film Festival.

Animation is used effectively to present the physics of lasers in a way that is essentially simple, but basically correct and informative. I tried the film on my ten-year-old son, and he seemed to grasp the principles of stimulated emission in a satisfactory way. There is, however, a careless use of the laser light, without any warning to the viewer that the use of such instruments must be accompanied by a respect for the potential dangers. The need for such careful respect is implied in some demonstrations, but should be included explicitly in a film so appropriately designed for the general public.

Use Laser Light to generate interest, to introduce principles, or to show the variety of applications for this exciting scientific enterprise. Alternatively, just present it as entertainment -- your audience will not be disappointed in either case.

From The Physics Teacher

PHOTOCOPIES OF TECHNICAL ARTICLES

The Technical Information Systems Committee of the Federation of Societies for Paint Technology has completed arrangements with the John Crerar Library to make available copies of any technical article currently listed in the Monthly Index to Coatings Literature (published in the Journal of Paint Technology).

The Crerar Library, in Chicago, initiated its Photoduplication Service in 1912 and today, copies of articles from 7,500 periodicals received by the Library are available for photocopying. Its collection of publications in the field of paint technology and manufacture is one of the most extensive in the world and has been further strengthened by contributions from the Federation's own library. The Federation, however, does not assume legal or financial responsibility for the duplication service.

Any reader of the Journal of Paint Technology may obtain photocopies of articles listed in the Monthly Index by filling out an order form on the last page of the Index. The orders should be sent to: Photoduplication Service, John Crerar Library, 35 West 33rd St., Chicago, Ill. 60616. Allow about ten days for delivery.

Cost of the service is $1.50 per article, plus $.30 per page. Payment should not be sent with the order as the Library will bill the customer after the order has been completed. Frequent users of the service may establish advance deposit accounts and obtain special discounts. Full description of the complete service, including translation of foreign language articles, is described in a free pamphlet available from the Library.

LETTER TO THE EDITOR

As a matter of fact we have been waiting very long now for the proceeding from Color 69. From our side we prepared a publication quite soon only for the Swedish market with the papers regarding the R&D work on a new order and scaling system. We have now decided to make it possible for our friends in other countries to take part of this publication with its conceptual and practical statements for this work.

In order to give you a chance to inform the members of the Inter-Society Colour Council of the availability of this publication we are sending a copy, under separate cover, and hope that you will find it worth while to give a note about it. (The title of the report is: "The NCS Colour Order and Scaling System." Ed.)

It can be ordered from Swedish Colour Centre, P.O. Box 45 020, 104 30 Stockholm 45, and the price for export delivery will be Sw.Kr. 19:--.

Sincerely yours
SWEDISH COLOUR CENTRE
Anders Hård

THE TINY COMPUTER INSIDE OUR SKULLS

The Intelligent Eye. By R. L. Gregory. Illustrated. McGraw-Hill. 191 pp. $7.95.

The more biologists learn about the process of seeing, the more complex and fantastic it turns out to be. We all know that the eye acts like a small camera, its flexible lens casting an upside-down image on the retina. Fibers of the optic nerve carry electrical impulses from the retina to the brain. The two optic nerves cross in a crazy way. All fibers from the left sides of each retina go to the brain's left half, all fibers from the right sides of each retina go to the brain's right half. There is, therefore, an invisible vertical line in our visual field. Points very close together at the center of the field, but on opposite sides of this line, are interpreted by opposite sides of the brain. It is the brain's evaluation of the pulsed input data that completes the total process called "seeing."

Richard L. Gregory, a psychologist formerly at the Universities of Cambridge and Edinburgh (he is presently at Bristol University), is one of the world's experts on visual perception. The Intelligent Eye is based on a series of six brilliant, dramatic lectures that he gave in 1967-8 for England's Royal Institution, which were televised in color by the BBC. The book is a delight both to read and look at. Most of its abundant drawings and photographs concern optical illusions as amazing as good magic tricks. (Some of the demonstrations in Gregory's BBC lectures were conjuring tricks, but of course these could not be included in the book.) Particularly amusing are the newly discovered "impossible figures," the best known of which is the shape that has two or three prongs depending on where your attention is focused. Gregory explains how certain impossible figures actually can be constructed as "possible objects" even though viewing them continues to befuddle the mind. He reproduces two startling lithographs by the Dutch artist M. C. Escher, one showing a perpetual motion device based on an "impossible stairway," the other showing a belvedere replete with contradictions of perspective. An earlier engraving by William Hogarth, also in the book, is equally crammed with visual impossibilities. And there are several reproductions of eye-twisting Op paintings to illustrate the roles of eye movements and afterimages in perception.

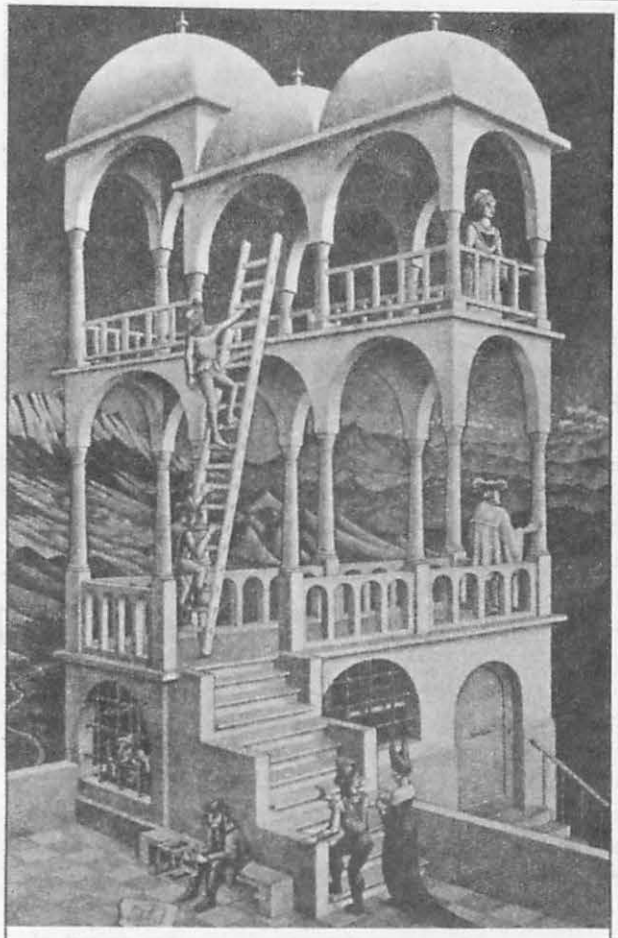

An impossible house, by Escher

To add to the fun, Gregory supplies the reader with a pair of red-green spectacles for viewing three-dimensional illusions. The glasses also are used in a clever proof that five flat illusions are deceptions in the mind rather than in the eyes. Two circular disks can be cut from their pages to be rotated on a turntable. If you stare for thirty seconds at one disk, watching its spiral line appear to expand, then shift your gaze to someone's face, the face seems to shrink although it remains, paradoxically, the same size. It is an important experiment because some psychologists have argued that illusions of this type (the most familiar is the feeling that scenery seen through a train window is drifting forward after the train has stopped) originate in tiny jerky movements of the eyeballs. The explanation is plausible in the case of the train but obviously cannot apply to the head-shrinking illusion.

Gregory's other disk is a "Benham top," a black-and-white pattern that generates "subjective colors" when spun. As Gregory discloses, such devices have been rediscovered no less than eight times since a French monk, Benedict Prevost, first described one in 1826. The flickering pattern induces electrical impulses of different frequencies in the retina's three color receptors (red, green, blue), forcing them to transmit pulses which the brain wrongly interprets as color signals. Benham tops also produce colors when seen on black-and-white TV screens. If the set is color-TV, the colors are even stronger because, as Gregory explains, the set's three color receptors are disturbed in precisely the same way as the retina's receptors.

The underlying theme of The Intelligent Eye, as well as Gregory's two earlier books, Recovery from Early Blindness (written with Jean Wallace) and Eye and Brain, is that perception is essentially a "look up"

system. The brain receives sensory data, then searches its memories of past experience (how this is done remains totally unknown) to decide on the most probable interpretation, the "best bet," that makes sense of the input data. Optical illusions result when the brain's choice of an hypothesis fails to correspond with the physical structure of what the eyes are seeing. As Gregory puts it: "The brain makes a wrong bet. It loses."

A striking instance, discussed in detail, is how the brain reacts to the back of a molded face mask. Seen close-up, in a good light, there are enough depth clues for one's mind to decide the mask is hollow. In a poor light, or even a good but diffuse light which casts no shadows, the brain's search through its memory bank turns up so few experiences of faces that go the other way, with hollow noses projecting backward, that it is impossible to see the mask as anything but convex even when one knows it isn't. Hundreds of other illusions have equally convincing explanations in the context of Gregory's primary posit.

I have one bone to pick. On page 146 Gregory attributes to Aristotle the belief that names of objects are parts of the essences of objects rather than labels attached to them by a culture. One thinks of the old joke about Adam telling Eve he named the tiger a "tiger" because it looked like a tiger. Aristotle certainly did not hold such a childish view, nor can I recall any philosopher who did. Perhaps Gregory meant that Aristotle believed all languages to possess a structure which, to some degree, corresponds to the structure of the physical world. If so, the view is neither childish nor out-of-date. Such a structure is none other than the "deep structure" in Noam Chomsky's linguistic approach which Gregory discusses sympathetically in his last chapter.

But this is a small objection to a beautiful, stimulating book. I cannot imagine anyone reading it without being entertained and enlightened on every page by the author's descriptions of strange visual phenomena, his ingenious explanations, and his concise remarks about their bearing on ancient philosophical questions concerning how the tiny computer inside our skull maps and interprets the monstrous universe that surrounds it.

Martin Gardner
A regular contributor to Scientific American, author of The Ambidextrous Universe

From Washington Post's Book World, August 2, 1970

THE ROLE OF SPECTRAL ENERGY OF SOURCE AND BACKGROUND COLOR IN THE PLEASANTNESS OF OBJECT COLORS

H. Helson and T. Lansford, Applied Optics, Vol. 9, page 1513, July 1970

Effects of spectral energy distributions of sources and colors of backgrounds on the pleasantness of object colors were determined by having 5 men and 5 women rate 125 object colors on 25 colored backgrounds in 5 sources of illumination. In addition, foods and complexions were rated in the same sources. All main effects were found to be highly significant statistically. While lightness and chromatic contrasts of object and background were more important than quality of illuminants, the latter were very important in the case of some object and background color combinations. Differences between the sexes were highly significant in that men tended to prefer cool source, object, and background colors, women the warm colors. The best colors for backgrounds had either low chroma and high reflectance (the pastel colors), or low chroma and low reflectance. The most important single factor determining the pleasantness of color combinations was lightness contrast. Hue and chroma contrasts, while of some importance, were not as decisive as lightness contrast. Some closely related color families may be substituted for each other, e.g., 5 and 10R or 5 and 10G, while others may not be, e.g., 5 and 10GY. The complex interactions of quality of sources with hue, value, and chroma of object and background colors on aesthetic responses to colors help to account for the conflicting statements often found in the literature regarding color harmony. In spite of the complexities of the problem, some generalizations regarding color harmony were found valid and others were shown to be in need of further investigation. This study was based on 156,250 individual ratings of object colors.

Author's Abstract

EASTMAN INTRODUCES BRIGHT, NEUTRAL RED DISPERSE DYE FOR POLYESTER FABRICS, CARPETS

A new disperse dye offering economy and excellent fastness properties in bright, neutral shades of red for any type of polyester dyeing is now available in commercial quantities from the Industrial Chemical Division of Eastman Chemical Products, Inc., a subsidiary of Eastman Kodak Company, Kingsport, Tennessee 37662.

Labeled Eastman Polyester Red R-LSW, the dye may be used for polyester/cellulosic blends, textured polyester, and polyester carpeting, as well as for acetate, triacetate, and nylon. It may be used effectively in package, beam, jet, beck and Thermosol dyeing methods.

This all-around "work horse" dye provides good penetration and level dyeing characteristics which are advantageous for textured polyester yarns and for carpets, while its excellent sublimation fastness and compatibility with catalysts suit it for use in precure and postcure durable press finishing. It exhibits

excellent build-up properties, and its neutral shade is applicable to a broad range of combination colors. Light fastness and crock fastness are excellent.

Reproduced with permission of American Cyanamid Company

NEW MEMBERS

The following applications for individual membership were approved by the Board of Directors on September 28, 1970. This group of 46 is by far the largest to enter the Council at one time in recent years.

Mr. Ronald C. Abbott SPE 515 Causeway Drive Apt. 125 Sandusky, Ohio 44870	Measurement and control of polychromatic colors. Organization and training of color groups. Auto industry colorant standardization and improvement. Color trends in automotive industry.
Mr. Kent Adams SPE 1934 3rd Apt. 2 Cuyahoga Falls, Ohio 44221	Basic problems in pigmentation of plastics, such as stability, permanence, and performance.
Mr. David L. Alston B. F. Goodrich Chemical Co., P.O. Box 122 Avon Lake, Ohio 44012	Use of digital methods for formulation of color matching by the Kubelka-Munk theory.
Mr. Carlos F. Andersen AChS 165 N. Rose Street Mt. Clemens, Mich. 48043	Color matching; methods of preparing better and more precise formulations to meet competitors' color standards.
Dr. K. P. Barr National Lending Library for Science and Technology Boston Spa, Yorkshire England	Librarian.
Mr. Rolf Bider 530 Bowen Street Magog P.Q., Canada	Dyeing and printing of textile materials. Colour measurement and automated shade prediction and associated activities such as on-line colour control, quality control of dyestuffs, dyeings, etc.
Mr. James A. Cave 2854 Coleen Court Louisville, Ky. 40206	Applications of color science to both color matching and areas not related to color matching.
Mr. Richard E. Chartrand AATCC, DCMA, NPVLA Allied Chemical Corp. P.O. Box 14 Hawthorne, N.J. 07507	Uses and specifications of organic pigments in all types of applications.
Mr. Yih-wen Chen 5219 N. Mohawk Ave. Milwaukee, Wisc. 53217	Research on the effect of color on visual perception. Application of color in education and industry.
M. Jean Chevalier GATF, GTA, SPSE, TAGA 91 Chps Elysees Paris 8. France	Color preparation for graphic arts industry.
Mr. Gordon Clark FSPT 55 E. Bacon So. Attleboro, Mass. 02703	Color measurement, reduction of tristimulus data in various color difference units, spectrophotometry.
Mr. Howard C. Colton SPSE 2021 Turk Hill Road Fairport, N.Y. 14450	Color photography -- products, uses, etc.

Dr. W. E. Degenhard AChS, OSA 21 Jordan Road Hastings on Hudson, N.Y. 10706	Color measuring instruments (Carl Zeiss, Inc., New York).
Mr. James C. Doherty FSPT, NPVLA 710 Avondale Ave. Haddenfield, N.J. 08033	Instrumental color matching and control. Instruments and computers related to both.
Mr. George S. Dominguez AATCC 50 Beacon Hill Road Ardsley, N.Y. 10502	Quality control of dyes and related chemicals.
Mr. A. Eugene Emily, Jr. TAGA, TAPPI Formica Corp. 10155 Reading Road Cincinnati, Ohio 45241	Instrumental analysis and numerical specification of color.
Mr. Paul V. Foote c/o Paint Research Stn. Waldegrave Road Teddington, Middlesex, England	Color measurement; color matching.
Dr. Tibor Fuleki AChS, IFT Horticultural Research Institute of Ontario Vineland Sta. Ontario, Canada	Chemistry of plant pigments. Tristimulus colorimetry of fruits, vegetables and their products. Color standards for fruits, vegetables and their products.
Mr. Peter Robert Gee 506 LeGuardia Place New York, N.Y. 10012	Graphic design in silk screen and other media. Basic research in the visual arts.
Mr. Edward B. Gilbert Union Carbide Company South Charleston West Virginia 25303	Color measurement of textile fibers and color matching.
Mr. Arthur T. Gronet AChS, ASTM, FSPT, NPVLA 640 N. 13th St. Easton, Pa. 18042	The production of commercial colorants for industry and the utilization of mineral colorants.
Mr. Lawrence Herbert GATF Pantone, Inc. 461 8th Ave. New York, N.Y. 10001	Specification of printing ink color.
Miss Sylvia W. Ho AATCC 310 Prospect St. Ridgewood, N.J. 07450	Computer color matching and quality control.
Mr. A. M. Keay FSPT Harmon Colors Allied Chemical Corp. P.O. Box 14 Hawthorne, N.J. 07507	Pigment identification, color matching, color specification, and any application that involves the use of synthetic organic pigments.
Miss Elaine F. Keller c/o Kollmorgen Color Systems Div., Instrument Development Laboratories 67 Mechanic St. Attleboro, Mass. 02703	Applications involved with color measurement and instrumentation.
Dr. Robert T. Kintz OSA Senior Research Technologist Eastman Kodak Co. Research Laboratories Bldg. 81 Rochester, N.Y. 14650	Physiological mechanisms of color-coding in the vertebrate visual system, psychophysical methods of color scaling, the use of color in photographic image reproduction.
Mr. Joseph S. Lord OSA Kollmorgen Corp. 67 Mechanic St. Attleboro, Mass. 02703	Design of instruments for measuring the physical attributes of color, light sources, and appearance. The use of modern computational techniques in processing instrument data.
Mr. H. J. McCarthy Allied Chemical Company P.O. Box 1069 Buffalo, N.Y. 14240	Color matching, standardizing dyes and pigments.
Mr. Robert E. Meeker c/o Macbeth Corp. Newburgh, N.Y. 12550	Light sources for color matching and photometric devices.
Mr. Bruce D. Miller TCA 55 Pleasant Ave. West Caldwell, N.J. 07006	Formulation and production quality control of genuine leather for automotive upholstery.
Mr. Walter E. Morehead The Proctor & Gamble Co. Spring Grove & June Street Cincinnati, Ohio 45217	Final appearance measurements, quality control and color instrumentation.
Mr. John S. Mueller FSPT 38323 John P. Mt. Clemens, Mich. 48043	Color measurement, specification, formulation, and control.
Mr. George J. Myers SPSE 52 College View Heights South Hadley, Mass. 01075	Photographic film transmission measurements. Human response to color differences for detection. Control of color balance in film production.

Mr. Nobou Osaku CAUS, TCA Nihon Ryukoshoku Kyokai 3 F Nihon Senshoku Kaikan 4-4, Bancho Chiyoda - Ku Tokyo, 101, Japan	Fashion, interior decoration, etc.
Mr. Sunil S. Parikh AATCC, AChS S & V Research Center 77 Executive Blvd. Elmsford, N.Y. 10523	Computer color matching. Textile and ink products (dyes and pigments). Physical properties of pigments and their relationship with application properties of pigmented systems.
Mr. Maurice Raymond University of Quebec, Arts 125 Sherbrooke St. West Montreal, 129 Canada	Research toward integration of physical, chemical, physiological and psychological aspects of color for educational purposes.
Mr. William H. Rhodes AChS, ASTM, FSPT 491 Columbia Ave. Holland, Mich. 49423	Color measurement and description. Application of colors in paint, printing inks and plastics. The chemistry and physics of pigments and dyes and their dispersion.
Mr. James S. Richard Ethyl Corp. P.O. Box 341 Baton Rouge, La. 70821	Visual color matching, computer assisted color matching, color control.
Mr. Charles G. Saleski Kollmorgen Corp. P.O. Box 950 Newburgh, N.Y. 12550	Development and promotion of systems for visual color control.
Mr. C. Frederick Schaus AIA, IDSA General Electric Co. 1 River Road Schenectady, N.Y. 12305	Measurement, specification; psychological inferences and trends in society; development of utility and industrial standards.
Ltc. Donald E. Smith Den Act, Dah Den Ci Ft. Hood, Tex. 76544	Acquiring a scientific approach to shade selection of natural teeth, to improve or modify our present materials.
Mr. Flavio Stevanato Colour Physics Laboratory Dominion Textile Ltd. Magog, P.A. Canada	Color measurement, computer colour matching, on-line colour control.
Mr. Charles F. Sturm AATCC RD#5, Box 436 Jackson, N.J. 08527	Absorption spectrophotometry, color specification, color order systems.
Mr. Robert Oliver Swain, Jr. 57 Leonard St. New York, N.Y. 10013	All aspects of color dealing with human perception.
Dr. William A. Thornton IES, OSA 27 Harvard Road Cranford, N.J. 07016	Light sources (color and color rendition).
Mr. Ray D. Unger SPSE 4801 Kenmore Ave. #1312 Alexandria, Va. 22304	The description, measurement and communication of color as related to specialized scientific activities.

APPEARANCE OF METALLIC SURFACES

ASTM recently published Special Technical Publication 478 on the above subject. It is the proceedings of a symposium presented at their 1968 annual meeting. The publication contains 85 pages, is paper covered, and sells for $7.00 through the American Society for Testing and Materials, 1916 Race Street, Philadelphia, Pennsylvania 19103.

PUBLICATIONS COMMITTEE

Robert W. Burnham, Chairman
Deane B. Judd
William J. Kiernan
Dorothy Nickerson

Send Newsletter Items to Editor:

Dr. Robert W. Burnham
Eastman Kodak Company
Research Laboratories, Bldg. 81
Rochester, N.Y. 14650

Other Correspondence to Secretary:

Dr. Fred W. Billmeyer, Jr.
Department of Chemistry
Rensselaer Polytechnic Institute
Troy, N.Y. 12181